VISIX Wall Mount Bracket - BW11

Mount Specifications

Material	Aluminum
Color	White
Dimensions	144mm x 178.8mm
Weight	700g

VX-WM-BW11 Dimensions

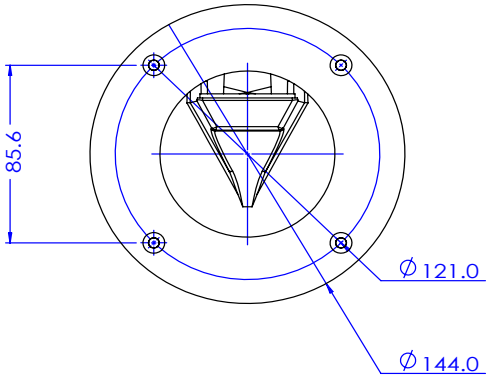

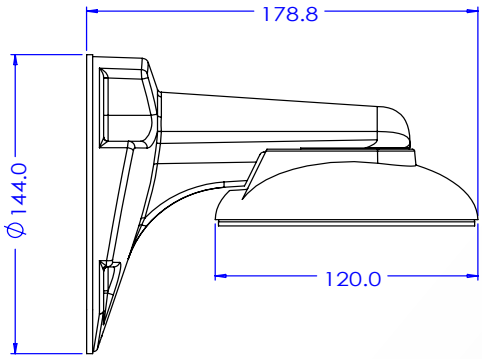

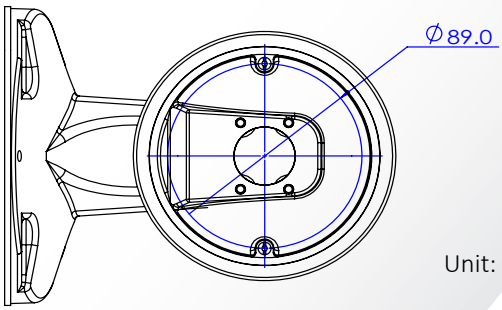

Unit: mm

© 2020 3xLOGIC, Inc. All rights reserved. Information in this document is subject to change without notice. 3xLOGIC and the 3xLOGIC logo are trademarks of 3xLOGIC, Inc. All other trademarks are the property of their respective owners. Revised April 28, 2020 11:00 AM